IT Series

Pequeños / Medianos eventos Lugares de culto Teatros Discotecas
Small / Medium events Houses of worship Theaters Night clubs

100 %
Made in
Europe

IT 218 F

Compacto subwoofer de alto rendimiento

Compact High Performance subwoofer

PRO DG
PROFESSIONAL DIGITAL GENERATION
SYSTEMS

IT 218 F

Compacto subwoofer de alto rendimiento / Compact High Performance subwoofer.

Una nueva generación.

La Serie IT es la última generación de la línea de instalación y touring de la familia Pro DG Systems. IT 218 F es el perfecto sistema para utilizarse como refuerzo de graves en pequeños y medianos eventos. Tanto para touring como para instalación permanente.

IT 218 F es lo suficientemente compacto y potente para el concierto en directo y discotecas, así como todo tipo de instalaciones “indoor”, además de ser un actor destacado en producciones teatrales y eventos corporativos.

A new generation.

The IT Series is the last generation for installation and touring from Pro DG Systems. IT 218 F is the perfect system to be used as low or deep in small and medium events. It can be used for touring or for permanent set up. IT 218 F is compacted and powerful enough for concerts and night clubs, as well as indoor setups. Finally it has been extensively used in theater productions and corporate events.

IT Series

Compacto subwoofer de gran rendimiento / High performance compacted subwoofer

DETALLES & BENEFICIOS
DETAILS & BENEFITS

- *Mediano tamaño, gran rendimiento / Small size, high performance.*
- *Excelente como refuerzo de graves / Excellent as a reinforce for deep tunes.*
- *Fácil integración con todos los sistemas de la Serie IT / Flexible integration with all systems from Pro DG Systems IT Series.*

APLICACIONES / APPLICATIONS

- Pequeños - Medianos eventos / Small - Medium events.
- Lugares de culto / Houses of worship.
- Teatros / Theaters.
- Eventos "indoor" / Indoor events.

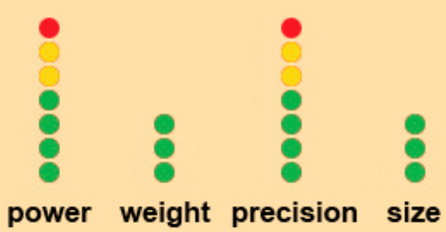

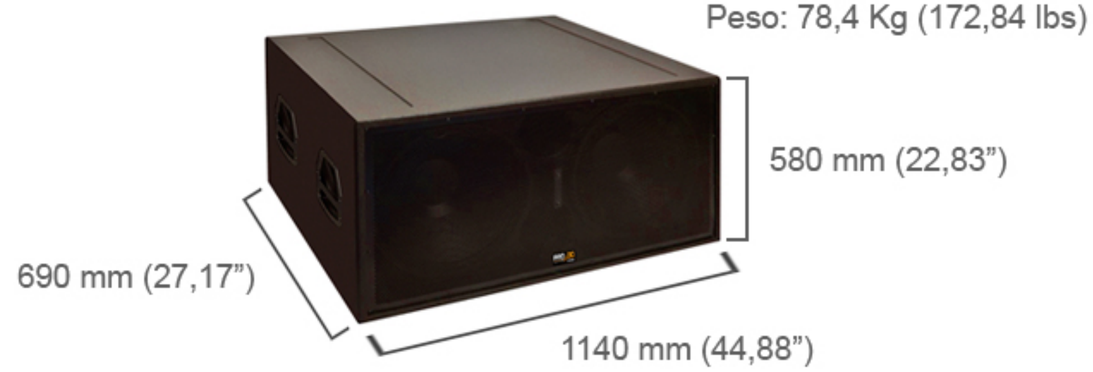

Excelente para pequeña P.A. Teatros, lugares de culto y eventos "indoor" donde precisemos un óptimo rendimiento y SPL. Simplemente el mejor de su rango gracias a su increíble relación potencia-tamaño. El mejor rendimiento, servicio y asesoramiento técnico al detalle, junto con la fácil adquisición de repuestos garantízan el éxito total del profesional. IT 218 F es un sistema tremendamente poderoso, con una potencia máxima de pico de 137 dB, ideal como refuerzo de graves para toda la Serie IT.

Excellent for small P.A. Theaters, houses of worship and indoor events where we could use high performance and SPL. The best thanks to its power and size relationship. The best performance, the best service and technical assessment to detail with the easy purchase of its spare parts guarantee, professional achievement in all of your events.

IT 218 F is an extremely powerful system with a maximum peak power handling of 137 dB, ideal as a deep reinforce for all systems from IT Series.

IT 218 F es un sistema subwoofer equipado con dos altavoces de 18" en un recinto sintonizado. Ideal como refuerzo de graves para los sistemas de la Serie IT. La configuración del transductor, al tratarse de un subwoofer genera una proyección de audio omnidireccional.

IT 218 F is a subwoofer system equipped, with two (2) 18" speakers in a tunned enclosure. Ideal as a deep or low reinforce for all the IT Series systems. Since it is a subwoofer system, the transducer configuration, generates an omnidirectional audio projection.

ESPECIFICACIONES ACUSTICAS / ACOUSTICS SPECIFICATIONS

Power Handling:	1400 W RMS (EIA 426A Standard). Programme of 2800 W / 5600 W peak.
Nominal Impedance:	4 Ohm (4.5 Ohm mínimo a 35 Hz)
Average Sensitivity:	101 dB / 2.83 V/1m (average of 35 - 1000 Hz wideband).
Calculated Maximum SPL:	/ 1m 131 dB continuous / programme of 134 dB / 137 dB peak.
Frequency Response:	(-6 dB) 35 Hz - 1000 Hz.
Frequency Range:	± 3 dB from 35 to 1000 Hz.
Nominal Directivity:	Omnidirectional.
Low Frequency Driver:	2 Beyma 18" speakers, 8 Ohm, 700 W, 460mm in diameter with high temperature, glass fiber voice coil.
Recommended Amplifier:	Pro DG Systems GT 2.4, GT 8.0 or Lab Gruppen FP 3400, FP 6000Q.
Connectors:	2 NL4MP speakon connectors.
Acoustic Box:	CNC model, 18 mm made from birch wood plated on the exterior.
Finish:	Standard black paint job.
Box Dimensions:	(HxWxD); 580x1140x690mm (22,83"x44,88"x27,17").
Weight:	78,4 Kg (172,84 lbs) net weight / 79,6 Kg (175,49 lbs) gross with packaging.

ARQUITECTURAL / ARCHITECTURAL

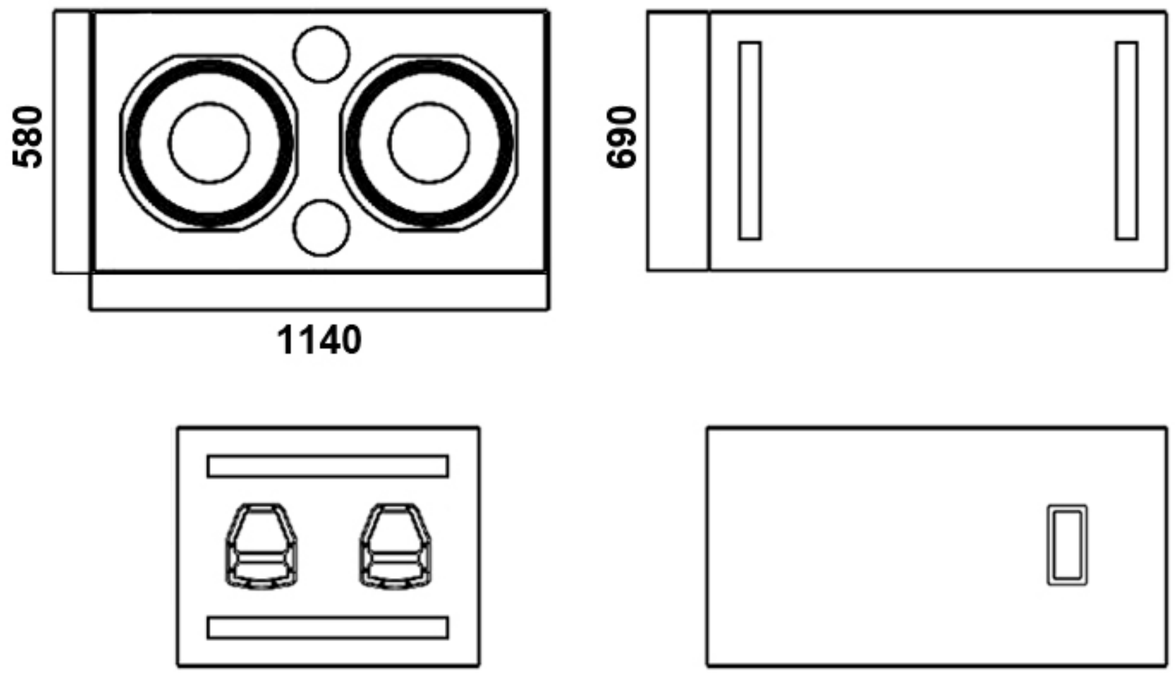

Respuesta de Frecuencia / Frequency Response

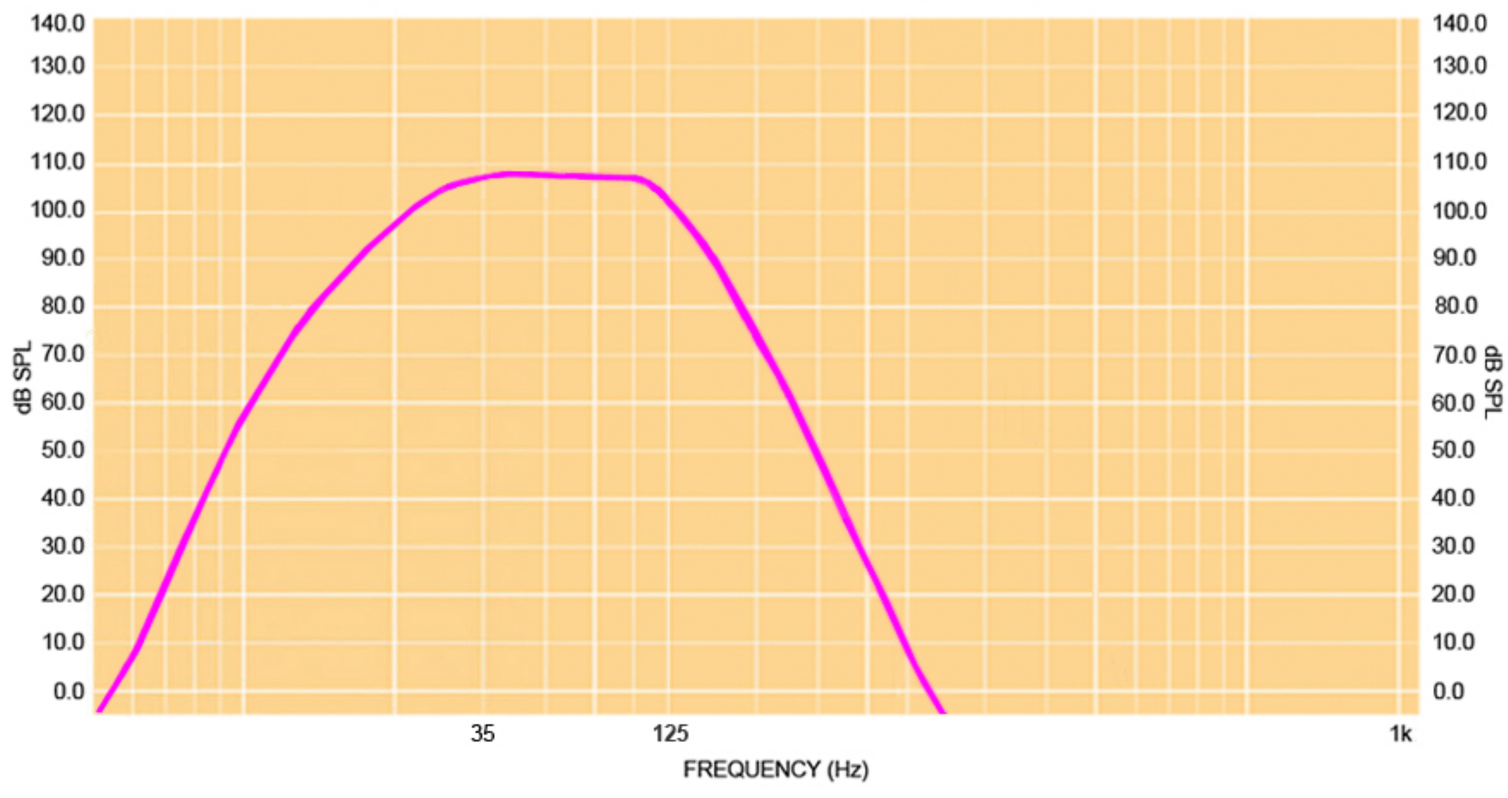

Pro DG Systems.
Urb. Rivera de San Luis. 21
14500. Puente Genil (Córdoba). Spain
Tlf: 678 548 947 607 290 698

www.prodgsystems.com